Working in Ceiling Spaces

SAFETY GUIDE TRAINING PROGRAM

Learning Outcomes

- Completing a Risk Assessment of a Ceiling Space
- Accessing & working in a ceiling space safely
- Implementing Hazard Controls
- Completing an Emergency Rescue Plan
- Completing a Site Specific Safe Work Method Statement for working in a ceiling space

Falls from heights

More than **12,000** workers were injured after falling from a height between 2014 and 2017.

25 died and more than **240** were permanently disabled.

(Reference: Working at heights | SafeWork NSW)

Consultation

You **must** consult workers, employees, subcontractors, labour hire, trainees, apprentices etc on health and safety matters / decisions directly affecting them and in which you influence or control work.

Reference: WHS Act NSW 2011 (Part 5 – Consultation, representation and participation)

Before you start

Review the

Hazardous Materials /Asbestos Register

Date of Identification	Type of Hazardous Material	Type	Friable / Non Friable	Condition	Specific Location	Accessibility
16/02/2022	Asbestos	AC Roof Sheeting	Non Friable	Good, no cracks	Whole of roof building	Not routinely accessed
16/02/2022	Lead	Paint	-	Good, no flaking	Handrails to plant room	Only accessed by maintenance staff

To identify what hazardous substances or materials you could encounter within the ceiling space before you enter and assist you in your risk assessment.

Before you start

Complete a

Pre Start Safety Briefing

or

Toolbox Talk

RECORD OF TOOL BOX TALK/SAFETY TALK

Workplace:	Date:
Supervisor/presenter:	
Subject:	Duration:

Persons Present

Print Name	Signature	Print Name	Signature

Comments & points raised:

Corrective Action	Action by	Sign off	Date

Before you start

You need to complete a **Risk Assessment** of the Ceiling Space to identify the **hazards** and risks that you will encounter.

Appendix A – Hazard Identification Checklist (refer to handouts)

Reference: WHS Act NSW 2011 (Clause 36 – Hierarchy of control measures)

What is a hazard?

Something, including a person's behaviour, that has the potential to cause death, injury or illness.

Hazards have the potential to cause different types and severities of harm, ranging from minor discomfort to a serious injury or death.

There are 6 types of hazards in the workplace:

- -Biological
- -Chemical
- -Physical
- -Safety
- -Ergonomic
- -Psychosocial

Consider your options based on the Hierarchy of Control

Based on the standard hierarchy of control firstly you must consider the highest level of protection to keep you or your workers safe before using a lower order control.

Reference: WHS Act NSW 2011 (Clause 36 – Hierarchy of control measures)

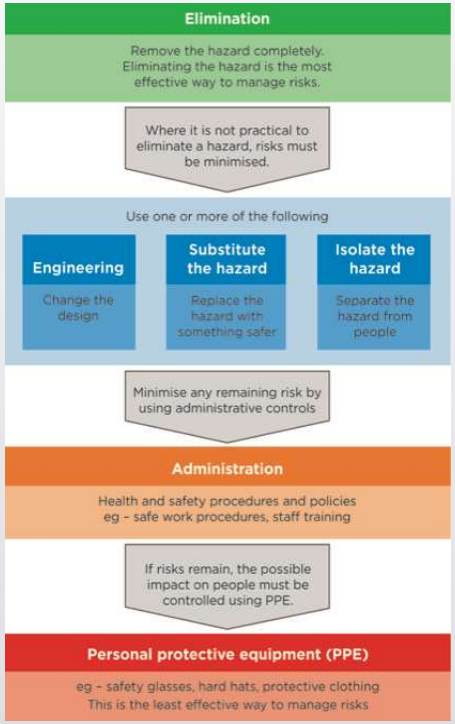

What Hazards can exist in Ceiling Spaces?

Hazards in a ceiling spaces generally include, but are not limited to:

- Working at heights (falling from height)
- Electrical wires / circuits (electric shock/electrocution)
- High Temperatures / Humidity (heat exhaustion/dehydration)
- Mechanical ducts / Water or gas pipes (claustrophobia /suffocation)
- Hazardous materials like asbestos or insultation (lung disease/poisoning)
- Biological / Pests or vermin present (poisoning)
- Working Alone (Isolation/disorientation)
- Manual Handling (Muscular Skeletal Disorders)
- Noise (hearing loss)

If you don't have to work at heights, don't. Working from the ground or a solid construction is always the safest option

Working at heights

Working at Heights is the first major hazard of working in the ceiling space.

If you don't have to work at heights, don't. Working from the ground or a solid construction is always the safest option.

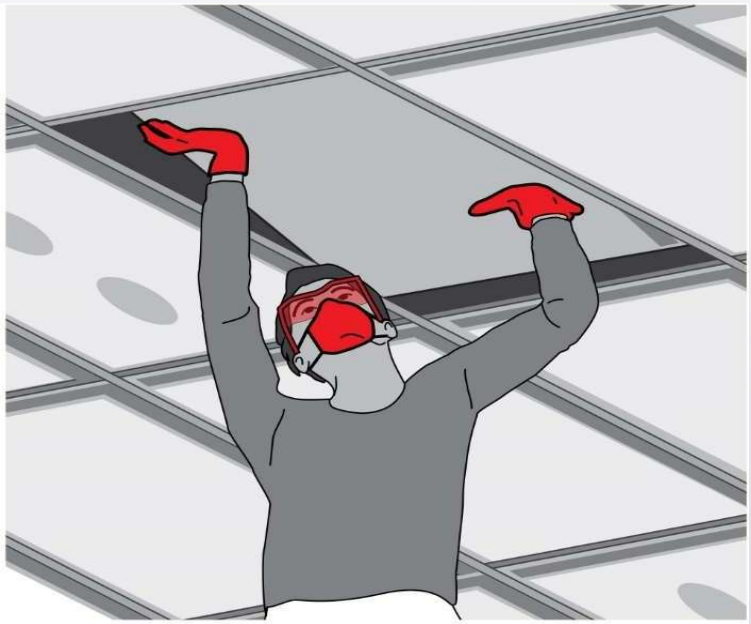

Access the ceiling via a Manhole / Access Panel

- Setup a Platform Ladder on a stable base
- Ensure PPE is worn

Setting up a Platform Ladder

- Ensure the ladder is free of defects and rated for industrial use (120kgs)
- Make sure it is fully open, locked and on stable ground
- Never lean so far that your belt buckle is outside the ladder stiles
- Never work on the top two rungs.

Secure the ladder

Extension Ladders must extend no less than 1m past the opening and be adequately secured

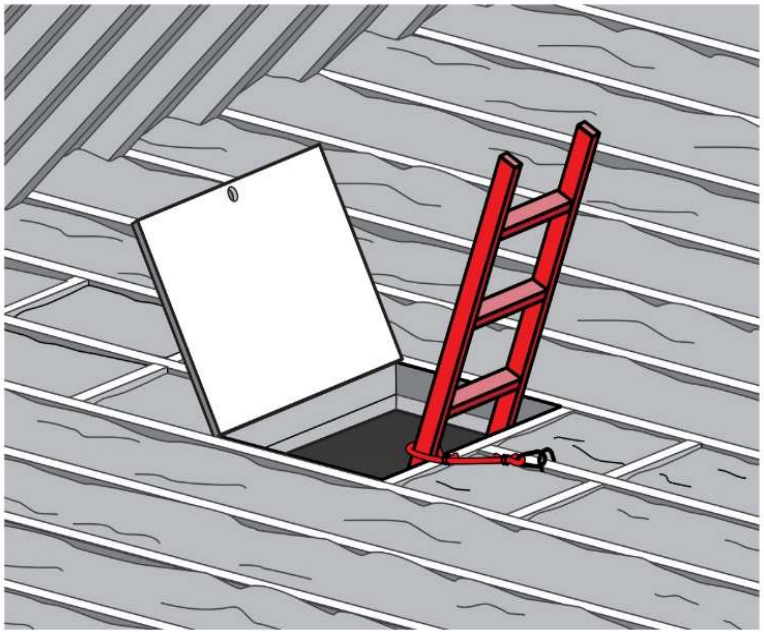

Install a working / landing deck

Install suitable decking / material to gain access when entering / climbing into the ceiling space

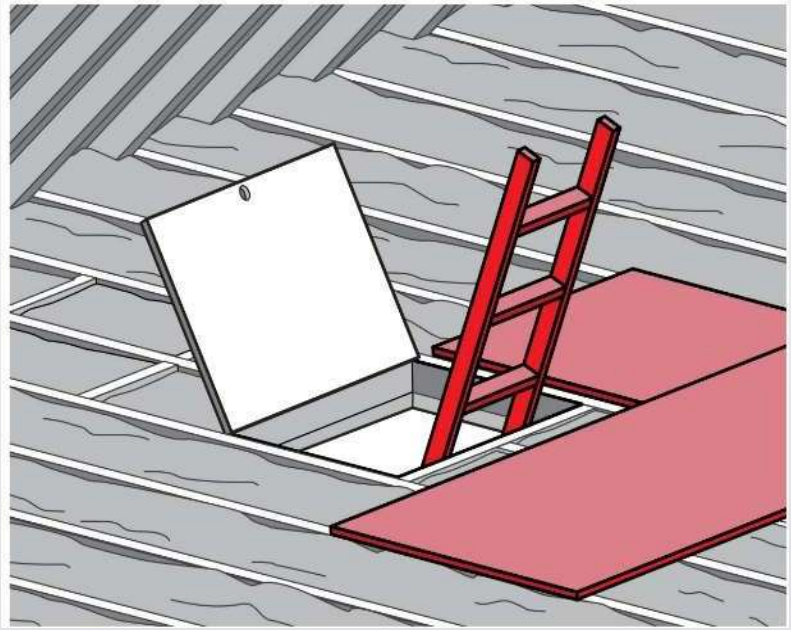

Now, you have a suitable space to complete your Risk Assessment

Refer to Appendix A

Hazard Identification Checklist

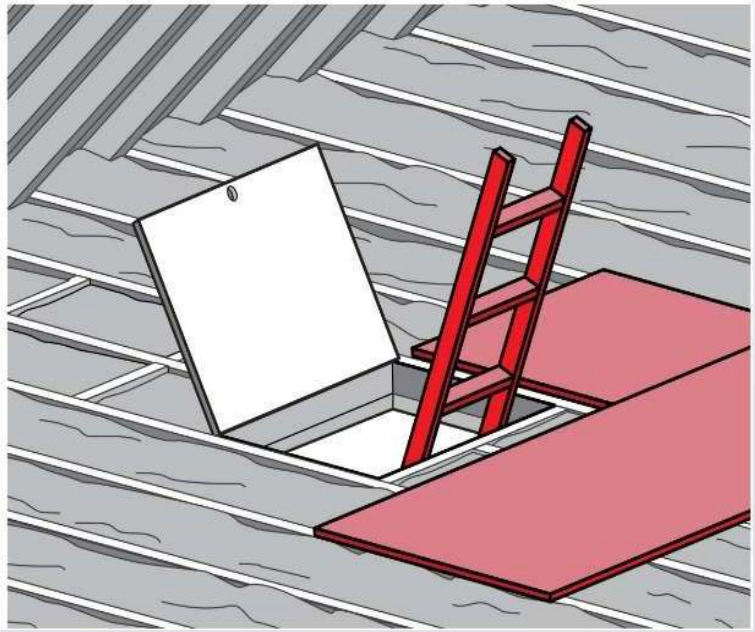

Accessing a suspended or false ceiling space

Accessing via ceiling tiles, may not be structurally sound and will need to be assessed by a competent person. Working from temporary work platform is your most effective control measure. Using an Elevated Work Platform (EWP) or a mobile scaffold to view the ceiling space are a couple of options

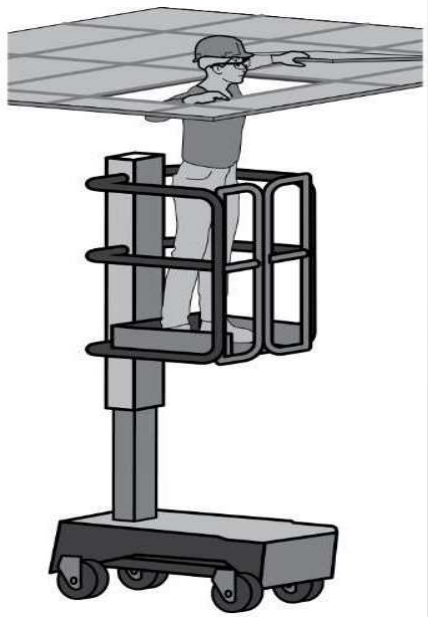

General hazards and risks when accessing a ceiling space via a Plant Room

Could include:

- Hazardous Substances
- Poor ventilation / vapours / fumes / suffocation
- Dangerous equipment / high voltage / electrocution
- Noise / Poor Lighting
- Low head room / overhead services
- Exclusion zones / tight narrow spaces
- Trips, slips and fall hazards
- Voids

CHECK THE BUILDING MANAGER OR CLIENT FOR A

BUILDING HAZARD & RISK REGISTER

COMPLETE A PERMIT IF REQUIRED

Accessing the ceiling space via a roof

WHEN ACCESSING A ROOF, MOST BUILDINGS / CLIENTS HAVE A PERMIT SYSTEM TO COMPLETE. CHECK WITH THE BUILDING MANAGER FIRST

REQUEST A COMPLIANCE CERTIFICATE

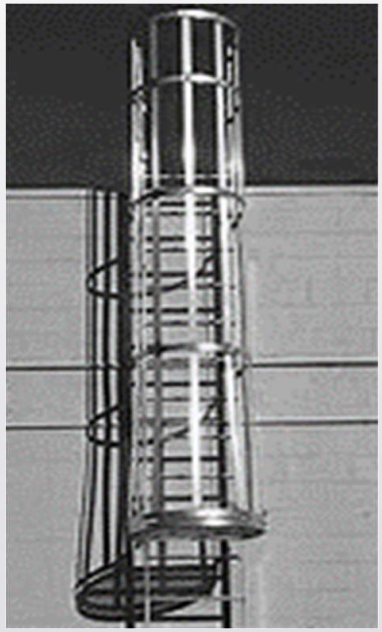

Setting up an extension ladder to access the ceiling space via the roof

Things to check:

- Make sure your ladder is in good working order, and rated for industrial use (120kgs)
- Set your ladder up so that the base is 1 metre away from the supporting structure, for every 4 metres of height (4:1 ratio)
- Secure your ladder top and bottom where possible
- Make sure the ladder extends 1m past the landing space

When climbing:

- Face the ladder
- Have both hands free to grip the ladder
- Have at least one hand and one foot in contact with the ladder at all times
- Never lean so far that your belt buckle is outside the ladder stiles.

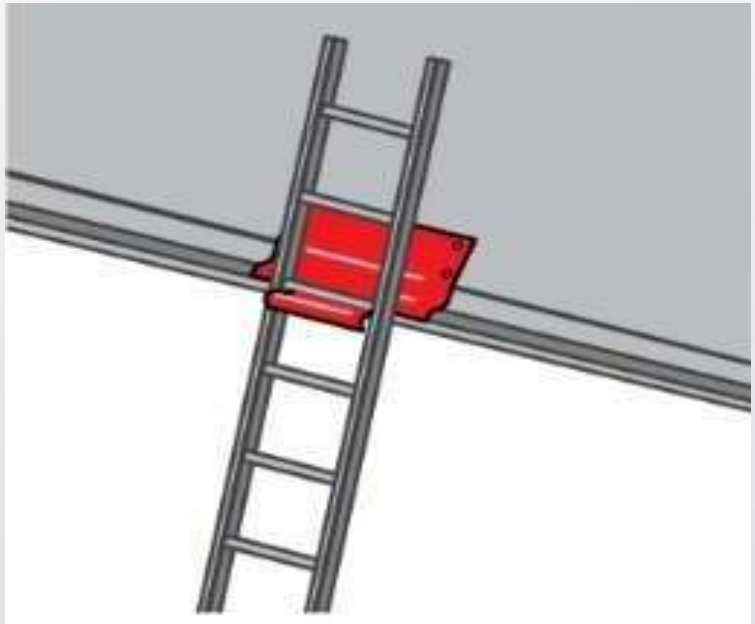

If you don't have to work at heights, don't. Working from the ground or a solid construction is always the safest option

Working from Mobile Scaffold

If you can gain safe access to the work area from within the confines of the scaffold and if it can be positioned to move in between work areas.

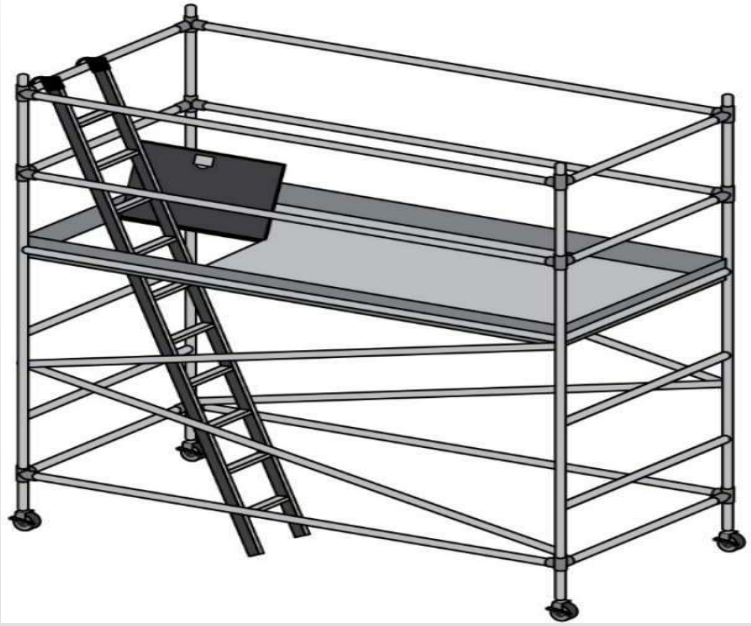

If you don't have to work at heights, don't. Working from the ground or a solid construction is always the safest option

Setting Up Mobile Scaffold

Setout scaffold, check for hazards within area
Check for a stable base
Complete the first lift
Install edges boards / toe boards
Erect next lift from platform
Install midrails / handrails / edge / toe boards
Install ladder access or stairway
No erection of mobile scaffold over 4m unless licenced.
Refer to:
https://www.safework.nsw.gov.au/resource-library/scaffolding/erecting,-altering-and-dismantling-scaffolding-part-1-prefabricated-steel-modular-scaffolding

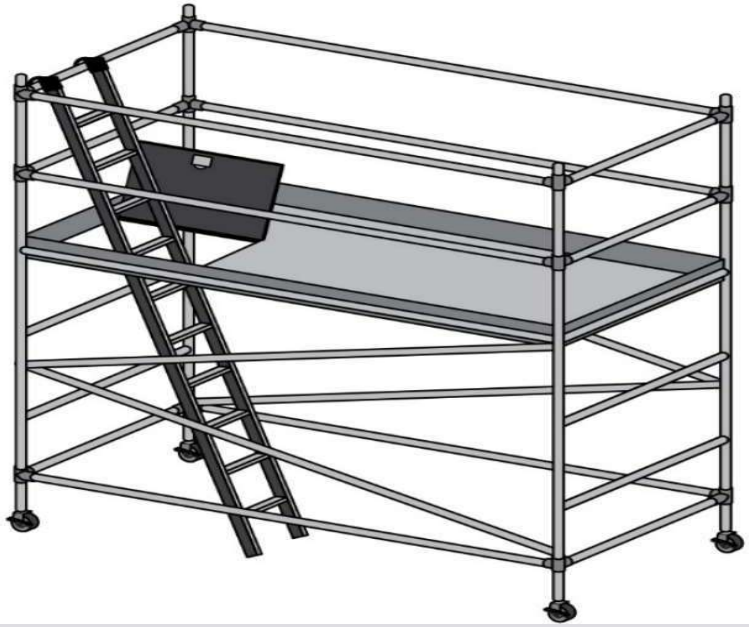

If you don't have to work at heights, don't. Working from the ground or a solid construction is always the safest option

Working from an EWP

Using an EWP could be used if you can gain safe access to the work area, without having to leave the machine.

Only competent persons can operate EWP's

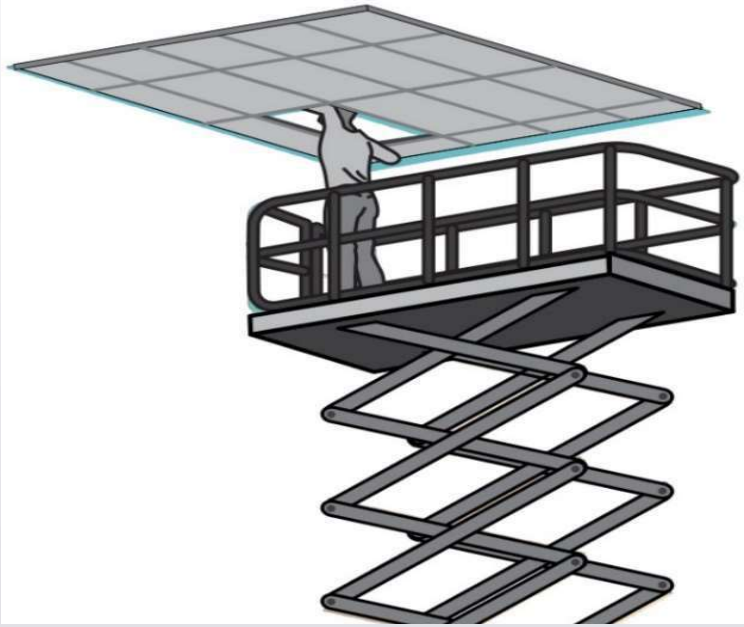

Working from Planks or Crawl Boards with Catch Scaffold

Working from planks or crawl boards on ceiling joists with catch scaffold beneath could be used, however planks or crawl boards need to be assessed for suitability prior, refer to Table 1 of the Safety Guide.

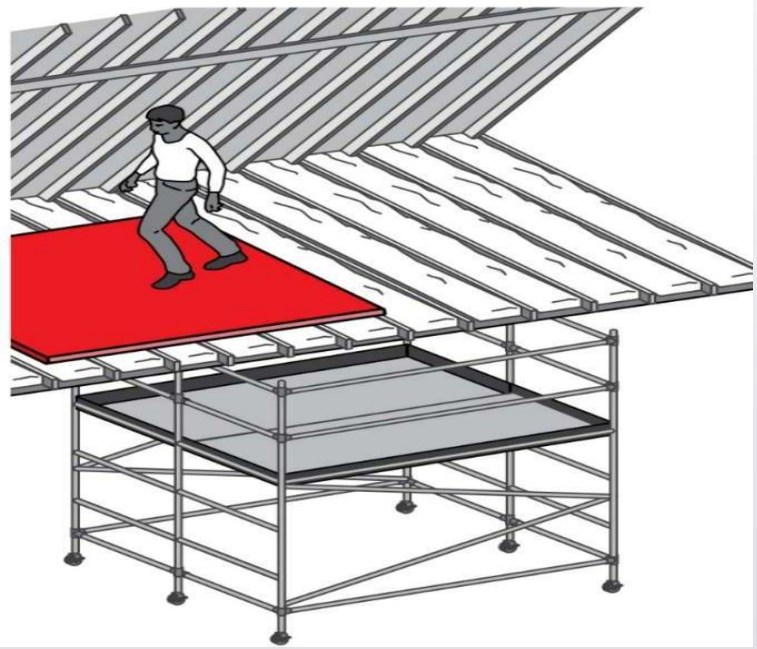

Working from Planks or Crawl Boards with a Handrail

Working from planks or crawl boards on ceiling joists with a handrail could be used, however planks or crawl boards need to be assessed for suitability prior, refer to Table 1 of the Safety Guide.

Working from Planks or Crawl Boards with a Safety Harness

Working from planks or crawl boards on ceiling joists with a safety harness attached to a **certified anchor point/s** could be used, however planks or crawl boards need to be assessed for suitability prior, refer to Table 1 of the Safety Guide.

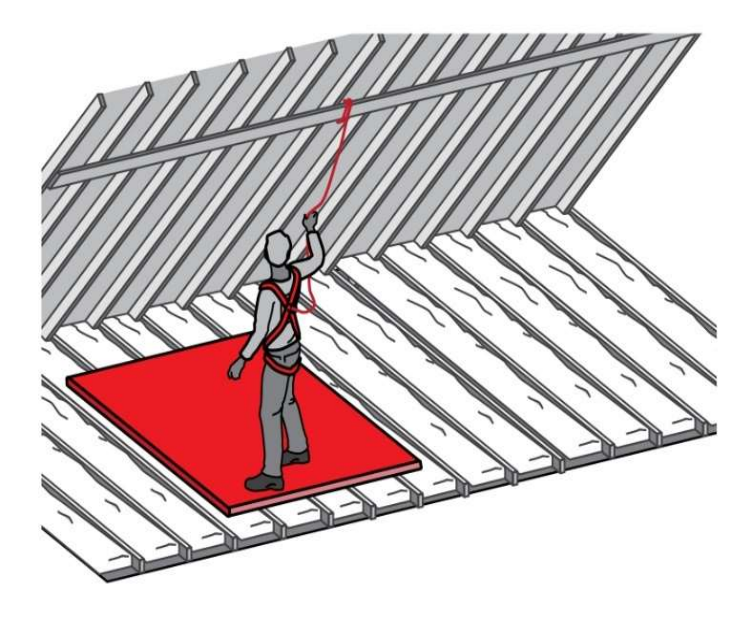

If you don't have to work at heights, don't. Working from the ground or a solid construction is always the safest option

Working from a Roof with a Safety Harness

Certified anchor points should be installed as per AS1891.4 Industrial fall-arrest systems and devices selection, use and maintenance. Refer to SafeWork for Managing the Risks of Falls for further information.

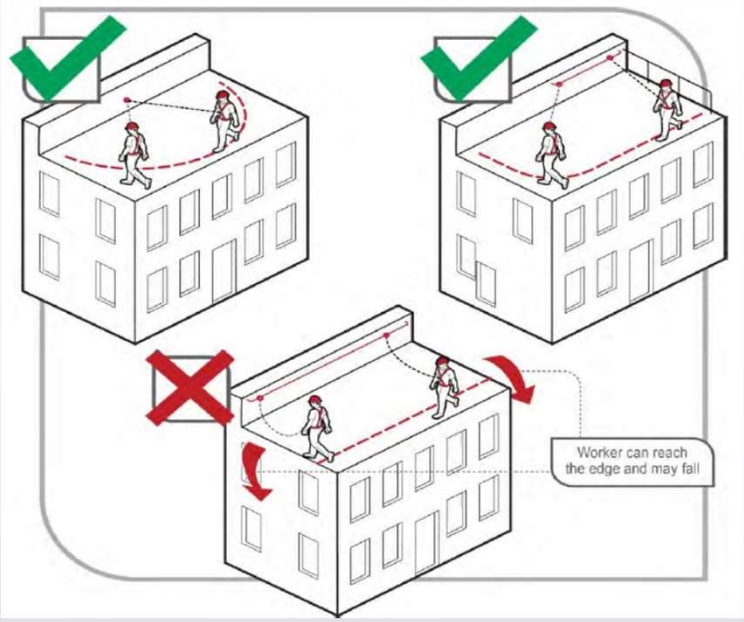

Electrical Hazards

Electrical Lights Wiring / Circuits

Licenced Electricians

Hazard Controls

- Licenced electrician to identify and isolate all electrical sources to boards or meter boxes to the building / property , verifies the effectiveness of the isolation and has installed a lockout lock/tag or an electrical isolation certificate.
- Identify any hazards that may be introduced as a result of isolating the power to the affected property.
- Test Before You Touch, prior to carrying out any electrical works.

Electrical Lights Wiring / Circuits

Non Electrical Workers

Hazard Controls

- Check the building or property appliances / lights etc to ensure the electricity (circuit) has been turned off or removed to isolate the power source.
- In addition use a volt stick to check wiring and any exposed metallic material (Metalised or reflective foil insulation can become energised, resulting in electrocution, serious injury or death, if you encounter the exposed wire or metal).
- If you are not sure power has been isolated, contact a licensed electrician to confirm power has been disconnected.

Electrical Lights Wiring / Circuits

Non Electrical Workers

Hazard Controls

- Do not walk over electrical cabling, keep all tools clear of cables. Never assume cables are de-energised, treat all cables as live.
- Report any damaged wiring or circuits to the building manager / client so repair can be undertaken by a licenced electrician before works commence.
- Consider potential circuits on timers such as lights that may test dead but switch on during work and generator backed circuits that may be labelled at the circuit breaker but not necessarily at the wiring. These could become live in a Blackout or other power loss event.

Solar Panels / Battery Banks

All Workers

Hazard Controls

- Check if the property has a solar/battery storage system. If so, consult with the system owner regarding the proper isolation procedure and follow that procedure.
- Consult with manufacturer for specific isolation methods.

- Note: turning the power off to the inverter on a solar panel system does not turn off power to the panels themselves, they will still supply power to the inverter, so the wiring from the panels to the inverter will still be live.

High Temperatures / Humidity Hazards

High Temperatures

Hazard Controls

- Monitor temperatures in the ceiling space.
- Re-schedule works to a milder day or earlier or later in the day when the temperatures are likely to be lower.
- Take extra fluids (water, electrolytes) into the ceiling space, keep hydrated.
- Avoid excessive durations in ceiling space during high temperatures
- Check the air-flow is adequate
- Provide natural and/or mechanical ventilation such as: fans, extraction unit, air- con system
- Remove ceiling tiles if possible, to increase cross flow ventilation & airflow.
- PPE – Provide workers with cooling vests to wear

Excessive Duration in High Temperatures / Humidity

Hazard Controls

- Reschedule works to a milder day or cooler part of the day.
- Limit the duration of time in the ceiling space. Rotate workers in / out of the ceiling space.
- Workers to keep hydrated.
- Refer to :https://www.safework.nsw.gov.au/hazards-a-z/working-in-extreme-heat

Mechanical Ducts, Water & Gas Pipe Hazards

Mechanical Ductwork

Hazard Controls

- Identify ductwork locations within the ceiling space and any unguarded moving parts associated – avoid areas where you can hit objects with your head or body.
- Do not stand on ductwork or fans, these could be suspended and cannot take increased loads.
- Watch for sharp edges on ductwork or booker rods.

Water Pipes

Hazard Controls

- Identify pipework, look for any lagging, this could contain asbestos – do not touch or disturb in any way shape or form.
- Identify water pipe locations within the ceiling space – avoid areas for hitting objects with your head or tripping hazards.
- Do not stand on water pipes, these could burst. Check earthing.

Gas Pipes

Hazard Controls

- Identify gas pipe locations within the ceiling space – avoid areas for hitting objects with your head or tripping hazards.
- Do not stand or lean on gas pipes, these could facture and cause a gas leak, burst or rupture.

Hazardous Materials & Substances

Asbestos

Hazard Controls

Check the building's hazardous substance register (if available asbestos register must be available if built prior to 31/12/2003).

If asbestos has been identified at the workplace, an asbestos management plan must be made available.

The plan must include:

- reference (or a link) to the asbestos register, and signage and labelling
- any associated works must be carried out in accordance with the control measures specified
- incident and emergency procedures
- consultation arrangements, responsibilities and training details of workers undertaking asbestos removal or asbestos related work.

Asbestos

Hazard Controls

- Avoid disturbing any hazardous building materials unless a building materials audit, Hazmat Report, asbestos register or NATA testing (report) has been completed or provided to determine if any of the existing building materials are class A (friable) or class B (non-friable) asbestos (e.g., cladding, pipe lagging, limpet/sprayed, guttering, etc).
- Provide adequate information, training and instruction and supervision to workers involved
- Wear suitable Australian Standards approved PPE that aligns to the nature of the work and associated hazards e.g., disposable coveralls, P2 mask / respirator, eye protection, gloves, etc) when working in the ceiling space.

Old Insulation

- Provide adequate information, training and instruction and supervision to workers involved.
- Wear appropriate PPE / disposable coveralls, P2 mask / respirator, eye protection, gloves at all times when in the ceiling space.
- Do not disturb or remove SMF (Synthetic Mineral Fibres) insulation unless necessary.
- Do not cut any SMF insultation unless necessary, if cutting is required use of hand tools should be used, with full PPE noted above. SMF's are hazardous refer to: Safework's Code of Practice https://www.safework.nsw.gov.au/__data/assets/pdf_file/0009/52884/Safe-use-of-synthetic-mineral-fibres-Code-of-practice.pdf
- Refer to WHS Regulation Clause 39.

Metalised / Reflective Foil Insultation

Hazard Controls

- In addition to higher order controls previously mentioned.
- Use a volt stick to check wiring and any metalised or reflective foil insulation, that can become energised, resulting in electrocution, serious injury or death.
- You must always refer to the manufacturer's specifications & instructions for correct isolation procedures and proper use of volt sticks.

Hazardous dust

Asbestos dust
SMF
Lead dust
Faecal dust

Hazard Controls

- Check the building's hazardous substance register if available.
- Avoid touching or disturbing any hazardous building materials unless a building materials audit, register or NATA testing (report) has been completed or provided to determine if any of the existing building materials are hazardous.
- Avoid areas that may contain faeces – unless you are the professional engaged to clean the area.
- Provide adequate information, training and instruction and supervision to workers involved.
- Wear appropriate PPE / disposable coveralls, P2 mask / respirator, eye protection, gloves at all times when in the ceiling space. Dispose of PPE correctly, wash hands with soap thoroughly.

Microbiological Hazards

Mould

Hazard Controls

- Avoid areas that may contain mould – unless you are the professional engaged to remove the mould.
- Wear appropriate PPE / disposable coveralls, P2 mask /respirator, eye protection, gloves at all times when in the ceiling space.
- Dispose of PPE correctly, wash hands with soap thoroughly.

Pests / Vermin / Snakes / Possums and or Rare Endangered or Threatened Species (RETS)

Hazard Controls

- Avoid areas that may contain pests or vermin etc – unless you are the professional engaged to remove the animal.
- Provide adequate information, training and instruction and supervision to workers involved
- Wear appropriate PPE / disposable coveralls, P2 mask / respirator, eye protection, gloves at all times when in the ceiling space.
- Dispose of PPE correctly, wash hands with soap thoroughly.

Working Alone Hazards

Working Alone

Hazard Controls

NEVER WORK ALONE IN A CEILING SPACE IF THERE IS NO-ONE ON SITE OR WITHIN THE BUILDING

Refer to https://www.safework.nsw.gov.au/hazards-a-z/remote-and-isolated-work

Hazardous Manual Tasks include:

- Repetitive or sustained force
- High or sudden force
- Repetitive movement
- Sustained or awkward posture
- Vibration
- Cramp

Lifting Materials

Hazard Controls

- Plan the lift
- Limit the weight of materials to be lifted into the ceiling ie, lift one item at a time.
- Use mechanical means e.g., hoists, genie lifts, forklifts depending on ceiling opening size, pulley system, crane for large items onto roofs.
- Two - person lifts for heavier items.

Moving Equipment

Hazard Controls

- Plan the movement.
- Use dolly trolleys where planks are installed. Push equipment rather than pulling.
- Two-man movements where possible.

Noise Hazards

Tool Noise

Hazard Controls

- Regular breaks during tasks Isolate work area.
- Use manual or battery operated tools.
- Wear appropriate hearing protection (PPE).
- Refer to: Safework Code of Practice https://www.safework.nsw.gov.au/__data/assets/pdf_file/0017/50075/**Managing-noise-and-preventing-hearing-loss-at-work-COP.pdf**

Plant Noise

Hazard Controls

- Shutdown plant if possible.
- Isolate the area.
- If not, limit exposure – split up shifts, take regular breaks from the ceiling space, worker rotation.
- Wear appropriate hearing protection (PPE).

Other Hazards could include:

Lift Shafts
Service Risers
Voids

Lift Shafts

- Entering ceiling spaces via metal roof's, could have unprotected lift shafts below. The shaft area could only be separated from the metal roof sheeting by a non load bearing mesh, which could result in falls.
- Decommissioned lift shafts in building that have or had a de-used provision for a future lift, which may not have been made good /safe may also have a fall hazard.
- If working in buildings with lifts, workers should always:
  - Check As Built Drawings
  - Conduct a visual inspection of the area
  - Proceed with caution when entering from the roof and always use fall protection

Service Risers

Service Risers could have breakout voids Incomplete / insufficient fall protection from the roof level – may only be non structural Fyrchek or a plasterboard type product, which could result in falls.

- If working in buildings with service risers, workers should always:
  - Check As Built Drawings
  - Conduct a visual inspection of the area
  - Proceed with caution when entering from the roof and always use fall protection if working near or adjacent to voids

Voids

Voids could consist of

- Unused lift shafts
- Decommissioned lift shafts
- Atrium Voids
- Stairwells
- Unidentified voids

Workers should always:

- Check As Built Drawings
- Conduct a visual inspection of the area
- Proceed with caution

If you don't have to work at heights, don't. Working from the ground or a solid construction is always the safest option

Working in Ceiling Spaces – tool safety

Tool safety is important.

Establish an exclusion zone in the immediate work area

Minimise the risk of falling objects the following types of tool restraints can include - a tethering belt.

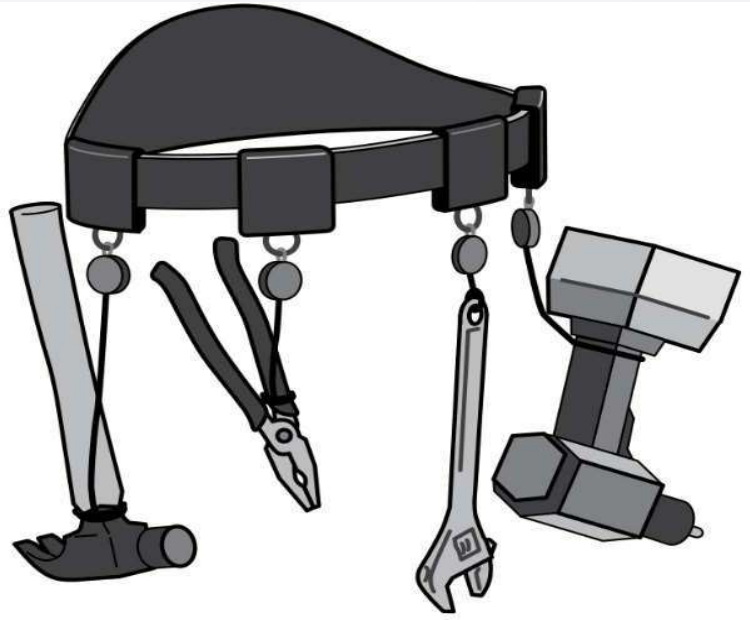

If you don't have to work at heights, don't. Working from the ground or a solid construction is always the safest option

Working in Ceiling Spaces – tool safety

Tool safety is important.

A holster belt or attaching a piece of rope or lanyard to a tool, then to your belt will work as well.

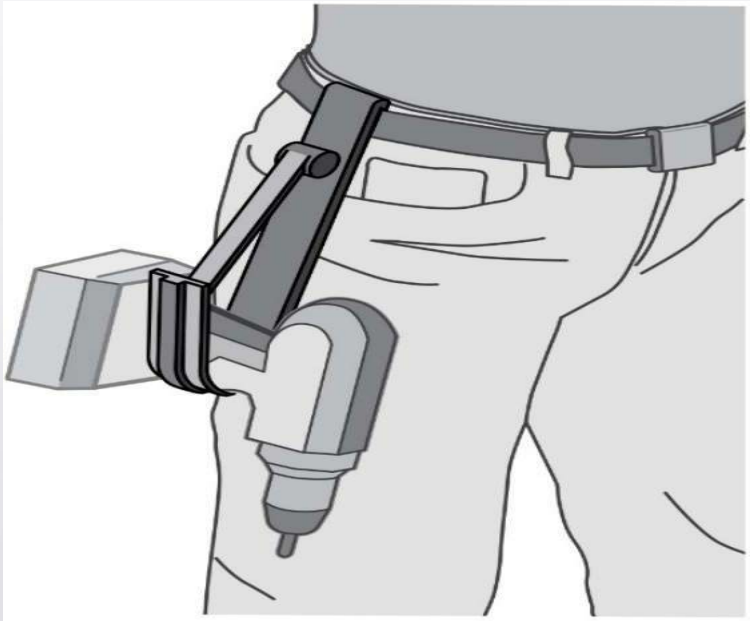

Working in Ceiling Spaces – tool safety

Tool safety is important.

You could also tie tools with a lanyard/rope to a bucket or container and secure it from movement to a rafter.

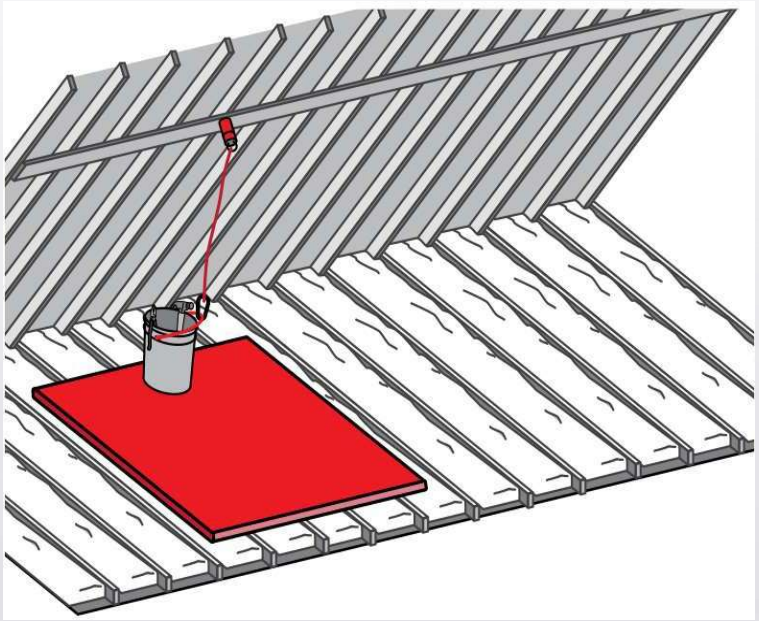

Equipment / PPE

Personal protective equipment is considered the lowest form of control, however some equipment or personal protective equipment that may be needed when accessing a ceiling space may include the following:

- Platform Ladder
- Extension Ladder
- Mobile Scaffold
- Elevated Work Platform
- Torch / lighting stands
- Fan/s
- PPE Equipment
  - Safety Harness / lanyards
  - Dust Masks/respirators
  - Gloves
  - Eye Protection
  - Hearing Protection
  - Knee Pads
  - Coveralls
  - Suitable footwear

Emergency Rescue Plan

(Refer to Handouts)

As required by the NSW WHS Regulation 2017 Clause 43 - Duty to prepare, maintain and **implement emergency plan**

WORKING IN CEILING SPACES – EMERGENCY RESCUE PLAN			
Site Supervisor Name / Number:		Site Rescuers Name/s:	
		Site Rescuers Training (Examples) First Aid Confined Space Fire Fighting Working at Heights	List:
Site Address:		Nearest Cross Street:	
Work zone Location:		Can Emergency Services have direct access to the work zone location? Yes / No (Circle) Estimate Emergency Services Response Time:	Yes = Name of Spotter to direct Emergency Services to area: No = Nominate how
Communications with height workers (Circle)	Verbal / Visual Mobile Phone Walkie Talkies Other: _____		
Removal Method:	Lowering to EWP Lowering with safety harness Lowering on stretcher	Rescue Equipment (Circle)	Emergency Rapid Response Kit / EWP / Platform Ladder Safety Harnesses / Stretcher / Rope / Lanyard

Emergency Rescue Plan

(Refer to Handouts)

- Who is going to be the rescuer's?
- What sort of training do they need?
- What sort of communication methods are you going to use?
- What sort of rescue equipment will you need?
- How will the rescuers remove you from the ceiling space if need?

WORKING IN CEILING SPACES – EMERGENCY RESCUE PLAN			
Site Supervisor Name / Number:		Site Rescuers Name/s:	
		Site Rescuers Training (Examples) First Aid Confined Space Fire Fighting Working at Heights	List:
Site Address:		Nearest Cross Street:	
Work zone Location:		Can Emergency Services have direct access to the work zone location? Yes / No (Circle) Estimate Emergency Services Response Time:	Yes = Name of Spotter to direct Emergency Services to area:
Communications with height workers (Circle)	Verbal / Visual Mobile Phone Walkie Talkies Other: _____		No = Nominate how
Removal Method:	Lowering to EWP Lowering with safety harness Lowering on stretcher	Rescue Equipment (Circle)	Emergency Rapid Response Kit / EWP / Platform Ladder Safety Harnesses / Stretcher / Rope / Lanyard

Training

The following training must be carried out prior:

- Construction Industry Induction Training (White Card)
- Working at Heights Training Course – this is an external course from a registered training organisation (RTO)
- Asbestos Awareness Training
- Trained in the use of Safe work method statement, emergency rescue plan
- Any training necessary for the use of plant and equipment involved

Safe Work Method Statement

(Refer to Handouts)

A safe work method statement is required to be documented / completed as working in ceiling spaces is a “High Risk Construction Work Activity.

Reference to : NSW WHS Regulation 2017 Clause - 299 Safe work method statement required for high risk construction work

Further Information / References

SafeWork NSW www.safeworknsw.gov.au
NSW Work Health and Safety (WHS) Regulation 2017
SafeWork NSW Code of Practice – Work Health and Safety Consultation, Cooperation and Co- ordination
SafeWork NSW Code of Practice - Managing Risks of Falls at Workplaces
SafeWork NSW Code of Practice Managing the Risk of Falls in Housing Construction
SafeWork NSW -Guide to safe solar panel installation SafeWork NSW Code of Practice - Confined Spaces
SafeWork NSW Code of Practice – Managing Noise and Preventing Hearing Loss at Work
AS 1657 - 2018 Fixed platforms, walkways, stairways and ladders - Design, construction and installation
https://www.safework.nsw.gov.au/resource-library/scaffolding/erecting,-altering-and-dismantling-scaffolding-part-1-prefabricated-steel-modular-scaffolding
AS1891.4-2009 Industrial fall-arrest systems and devices Selection, use and maintenance.
https://www.safework.nsw.gov.au/hazards-a-z/working-in-extreme-heat
https://www.safework.nsw.gov.au/hazards-a-z/working-at-heights
https://www.safework.nsw.gov.au/hazards-a-z/ladders
https://www.safework.nsw.gov.au/safety-alerts/safety-alerts/electrical-hazards-when-working-in-ceiling-spaces
https://www.safework.nsw.gov.au/hazards-a-z/mould
https://www.safework.nsw.gov.au/hazards-a-z/confined-spaces
https://www.safework.nsw.gov.au/__data/assets/pdf_file/0009/52884/Safe-use-of-synthetic-mineral-fibres-Code-of-practice.pdf
https://www.safework.nsw.gov.au/hazards-a-z/remote-and-isolated-work

Quiz Time

Question 1.

Name two hazards that could exist within a ceiling space?

Question 2.

If working off planks or decking boards, name one item that should be checked before using the plank or deck?

Question 3.

How far should a ladder extend past a ceiling entry point?

Question 4.

Do you need a Safe Work Method Statement to work in a ceiling space?

Question 5.

Do you need any training to carry out works in ceiling spaces?